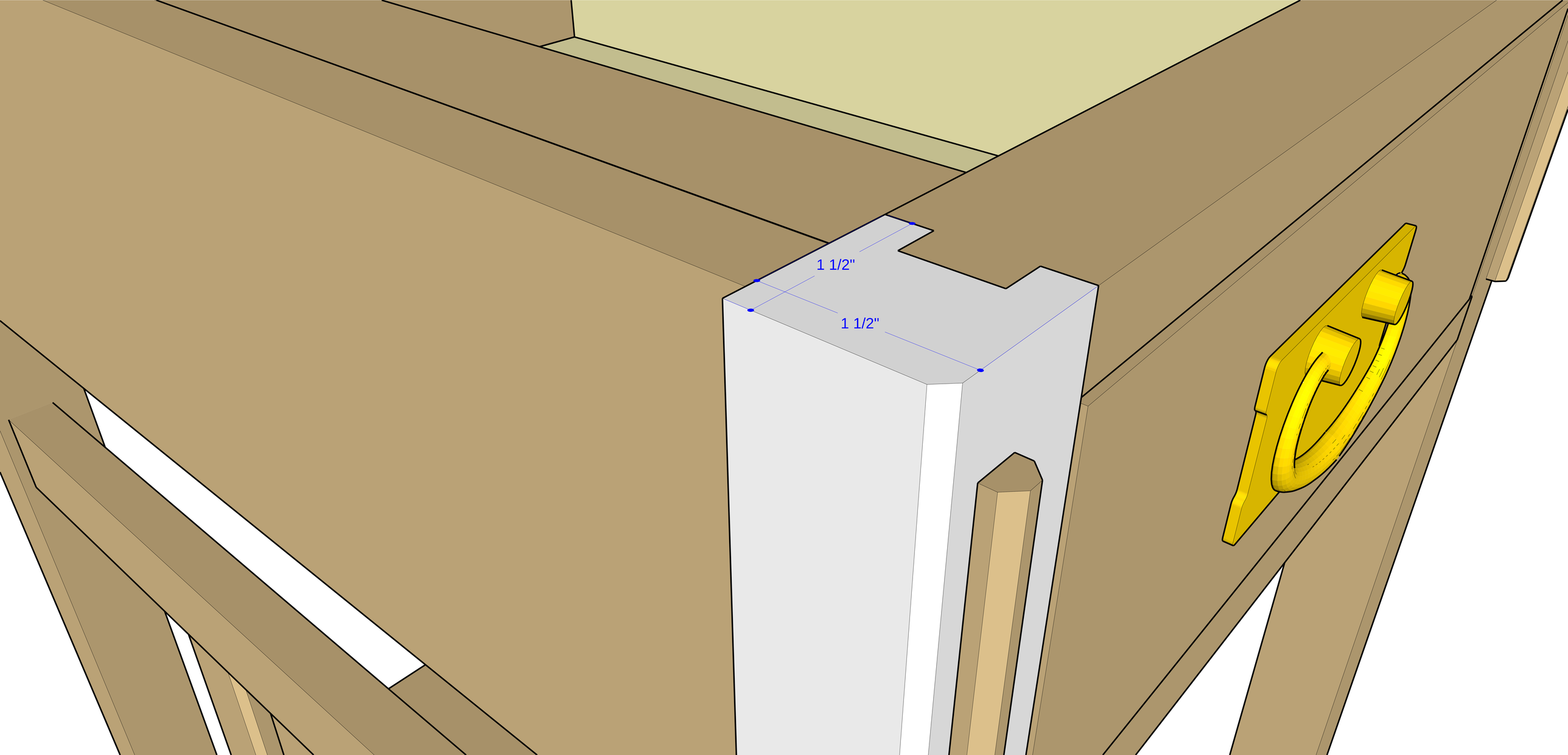
1 1/2"
1 1/2"